Acequias:Their Culture & Future

Arnold Valdez, Senior Planner

Santa Fe County Growth Management Department
Planning and Development Division
Santa Fe, New Mexico

December 2007

Acequias: Their Culture and Future

Introduction

The Southwest Summer Institute for Preservation and Regionalism, as a part of the University of New Mexico School of Architecture and Planning sponsored a course on Acequias. The course was one of three courses held May through June 2007. The acequia course was co-sponsored by Santa Fe County Land Use Department. A memorandum of understanding was initiated and signed by UNM and Santa Fe County. The joint venture allowed the University and County to work together in organizing the presentations and field studies. Santa Fe County was selected because of the location of several Acequia systems within close proximity to Albuquerque. La Cienega Community Acequia was selected as the study site. Santa Fe County Senior Planner and UNM Adjunct Assistant Research Professor, Arnold Valdez, organized the course in conjunction with Eric Deloney, Chief (Retired) of the Historic American Engineering Record (HARE), National Park Service. Daniel Wier, Santa Fe County, GIS Planner participated in the field work and presentations. Other staff participating in the field work from the County included technicians from the Geographic Information Systems Program.

Course History

Water is the blood of the land." Acequias, also called community ditches, symbolize the spirit of community in New Mexico. Their maintenance and improvement are borne by the people who use them.

The Southwest first was settled by indigenous people at least eight hundred years ago. Their pueblos were located near water and the crops were irrigated by diverting water from the rivers. When the Spanish arrived four centuries later, they introduced similar techniques of irrigation - acequias. Developed in Spain since the time of Moorish conquest, these technologies were imported from the Old to the New World. Some 800 acequias, representing 5000 miles of ditches are estimated to remain in New Mexico. Acequias were the first form of governance in New Mexico. They are engineered systems, but more significantly, they illustrate culture and a way of life.

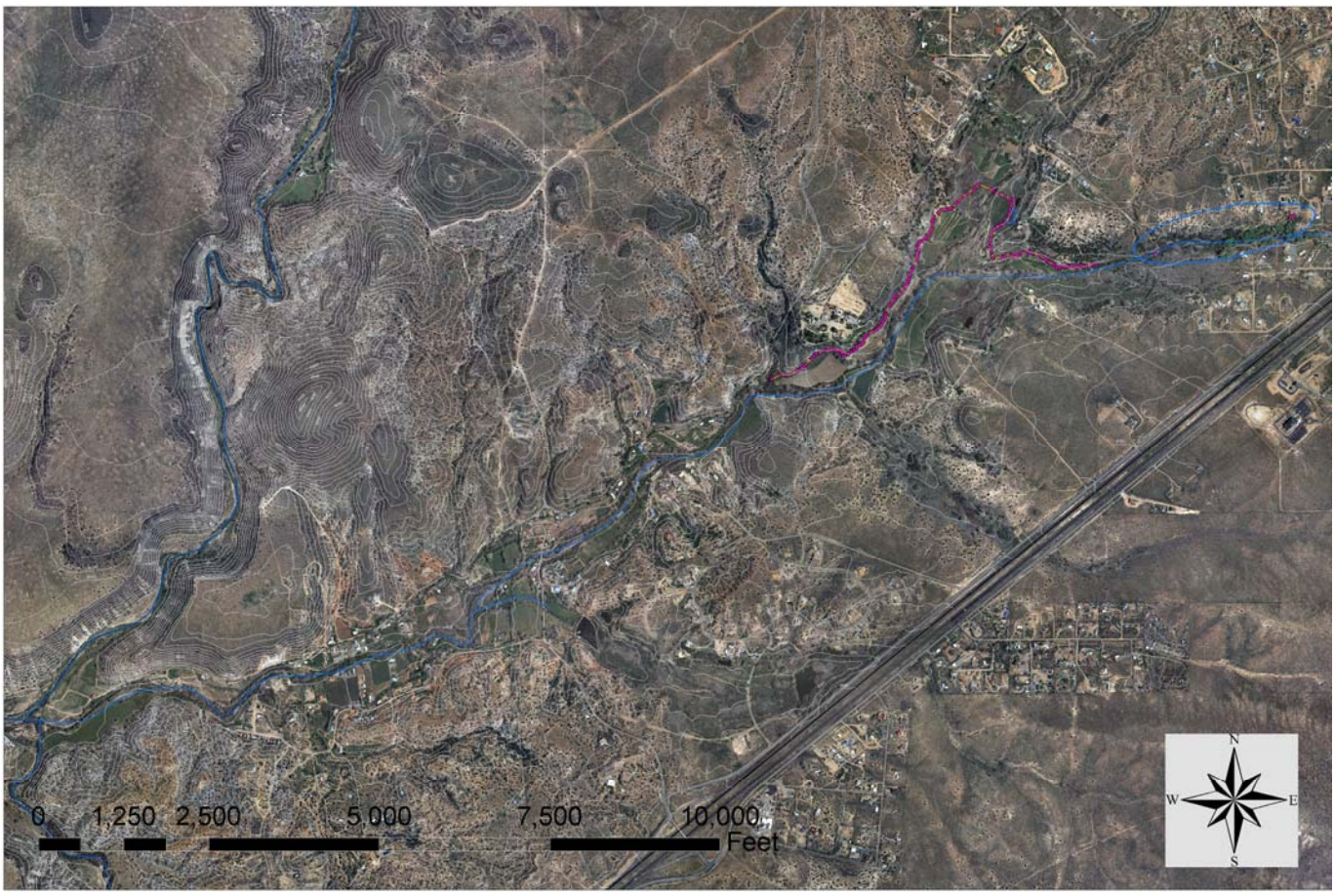

Figure 1. La Cienega Community Acequia

Today, acequias are threatened by development, over-use, competing technologies to harvest water, and the decline of traditional Hispanic-Indian agriculture. The course explored the history of Acequias, how they shaped the cultural landscape, as an engineering artifact, their contribution to traditional communities, and the challenges and opportunities for conservation and continued use.

Acequias: Their Culture and Future provided an introduction to one of the most pressing issues of the American Southwest through the lens of acequias. technologies such as laser scanning, GIS/GPS, photography, site research, and photogrammetry In addition to presentations on these issues by leading water experts in the state the students participated in field studies. La Cienega Acequia, southwest of Santa Fe, was documented using techniques based on the National Park Service's Historic American Buildings Survey, Historic American Engineering Record, and Historic American Landscape Survey (HABS/HAER/HALS) program.

Figure 2. Private Property within La Cienega Acequia

Santa Fe County Planners worked closely with Reymundo Romero Mayordomo of la Cienega Community Acequia. Private property owners Tom and Susan Simons granted access to their property where the acequia diversion point orginates. Below the Simon's property El Rancho de las Golondrinas also allowed UNM and Santa Fe County to enter their property in order to survey and document the lower section of the acequia. The community of La Cienega was very supportive of the Acequia field work and offered their community center for a meeting during mid-week of the seminar.

Figure 3. Reymundo Romero, Mayordomo & Arnold Valdez, Planner

Figure 4. GPS Technicians acquiring GPS data at diversion structure

The initial ground survey work for La Cienega Acequia involved GPS technology provided by Santa Fe County Geographic Information Systems Program. Two GPS technicians accompanied by Dan Weir from the county walked the acequia taking GPS point data along a two mile stretch of La Cienega Acequia in early March.

Dan Wier, GIS planner for Santa Fe County prepared the survey base maps from the GPS field data for the UNM Students. Dan also coordinated the photographs from the field survey to the GPS map points. In addition to the GPS survey work, County Planner Arnold Valdez participated in the annual cleaning of the La Cienega Acequia. This opportunity allowed the community to work cooperatively in assuring that the acequia would be ready to channel the spring fed water efficiently throughout the landscape. About 24 members from La Cienega area participated in the cleaning of the acequia in early April.

Figure 5. GPS Points of La Cienega Acequia

Figure 6. Cleaning of the Acequia

Figure 7. Dr. Jose Rivera discusses Acequia Culture

The Acequias Course at UNM

"*Acequias*: Their Culture and Future" was held June 18th -22 at the University of New Mexico School of Architecture and Planning. Total enrollment was 16 graduate students and one undergraduate. There was a mix of architecture, landscape architecture, planning and archaeology backgrounds. The course syllabus included two and one-half days of academic presentations with equal time for field studies totaling a week. In addition to the academic presentations at UNM and field studies, additional hours were required to fulfill the requirements for the three-credit hour course.

Historical perspectives on Acequias were covered by UNM Professors, Jose Rivera and Sylvia Rodriguez. Dr. Frances Levine, Director, Palace of the Governors, New Mexico History Museum supplemented the historical views with here presentation of "The Acequia: A Metaphor for Sustaining Community". The New Mexico State Engineers Office provided an overview of water law and acequia adjudication process. Documentation of Historic *Acequias* was covered by John Murphey, New Mexico State Historic Preservation Office.

Figure 8. Dan Wier GPS/GIS Field Documentation

Eric Deloney discussed HABS/HAER Engineering Documentation while Martin Stupich, photographer covered photographic documentation formats. Santa Fe County Planner, Dan Wier presented GPS/GIS field documentation while Arnold Valdez reviewed field documentation methods of *acequia* landscapes. Miguel Santistevan, of The New Mexico Acequia Association Community talked about contemporary perspectives on *acequias* while traditional farming practices on *acequias* was discussed by Estevan Arrellano.

Figure 9. Marty Stupich-Photographic Documentation

Field Work at La Cienega

Mid-day Wednesday June 20th, the field work of the seminar began by traveling to Rancho de las Golondrinas for a tour of the "El Agua Es La Vida (Water is Life)" exhibit. A tour of the exhibit and discussion on Acequias was presented by Lou Ann Jordan, Rancho de las Gonondrinas Staff. Documentation of the acequia at Rancho de Las Golondrinas will also take place during the next two days of the field work.

Figure 10 El Agua Es La Vida Exhibit

After the tour of the exhibit a riparian survey of La Cienega Creek was conducted by Bill Fleming, University of New Mexico Planning Professor. The survey covered data collection and techniques for documenting the hydrological characteristics and associated landscape.

Figure 11. Riparian Survey at La Cienega Creek

Presentation at La Cienega Valley Community Association (LCVCA)

Community outreach is a strong component of the planning aspects of the seminar and essential for informing the community about the objectives and goals of the field work and anticipated results. Carl Dickens, President of LCVCA, arranged for a gathering of community members at the community center.

Figure 12. David Benavides Presentation on New Mexico Acequias

The UNM Seminar Instructors and students presented an overview of the course and purpose for documenting the La Cienega Acequia. David Benavides, Attorney for New Mexico Legal Aid was invited by the seminar instructors for a presentation on New Mexico Acequias and legal problems and challenges.

The remainder of the seminar time was spent documenting the upper portion of La Cienega Acequia. About two miles of the acequia was documented beginning at the diversion point on Tom Simons property and ending at the west boundary of Rancho de las Golondrinas. Field studies included landscape sketches, measurements, photographs and historical research. Each student was required to maintain a field note book or journal with the field work for later translation into large format drawings to HABS/HAER Standards.

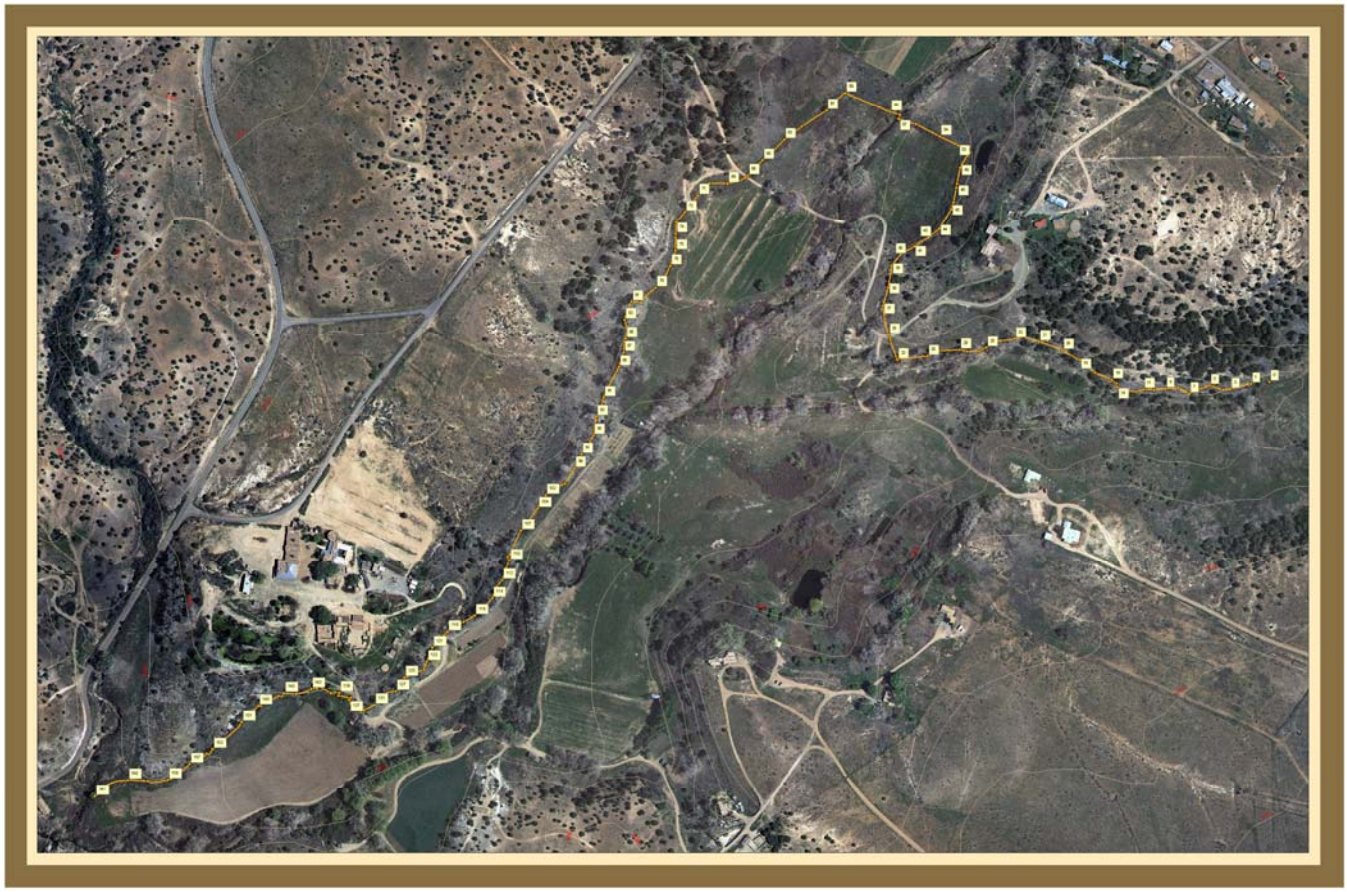

Figure 13. La Cienega Acequia Study Area

Figure 14. UNM Acequia Seminar Students & Instructors

Figure 15. Diversion Point Documentation

Figure 16 . Typical Acequia Documentation

Figure 17 Truchas Molino Documentation

Figure 18. Molino Interior Documentation

Final Drawings and Documentation of La Cienega Field Studies

With the completion of the field work, the students were required to compile and organize the data into a combination of historical, landscape reports, and HABS/HAER drawings. Additional time beyond the one week of class time was allowed to complete the final reports and drawings. Four reports were generated covering history and contemporary use of acequias, archaelogical documentation, and landscape characteristics. A total of nine sheets of drawings were generated: vicinity and site maps, acequia profiles and details, and measured drawings of the Molino at Rancho de las Golondrinas.

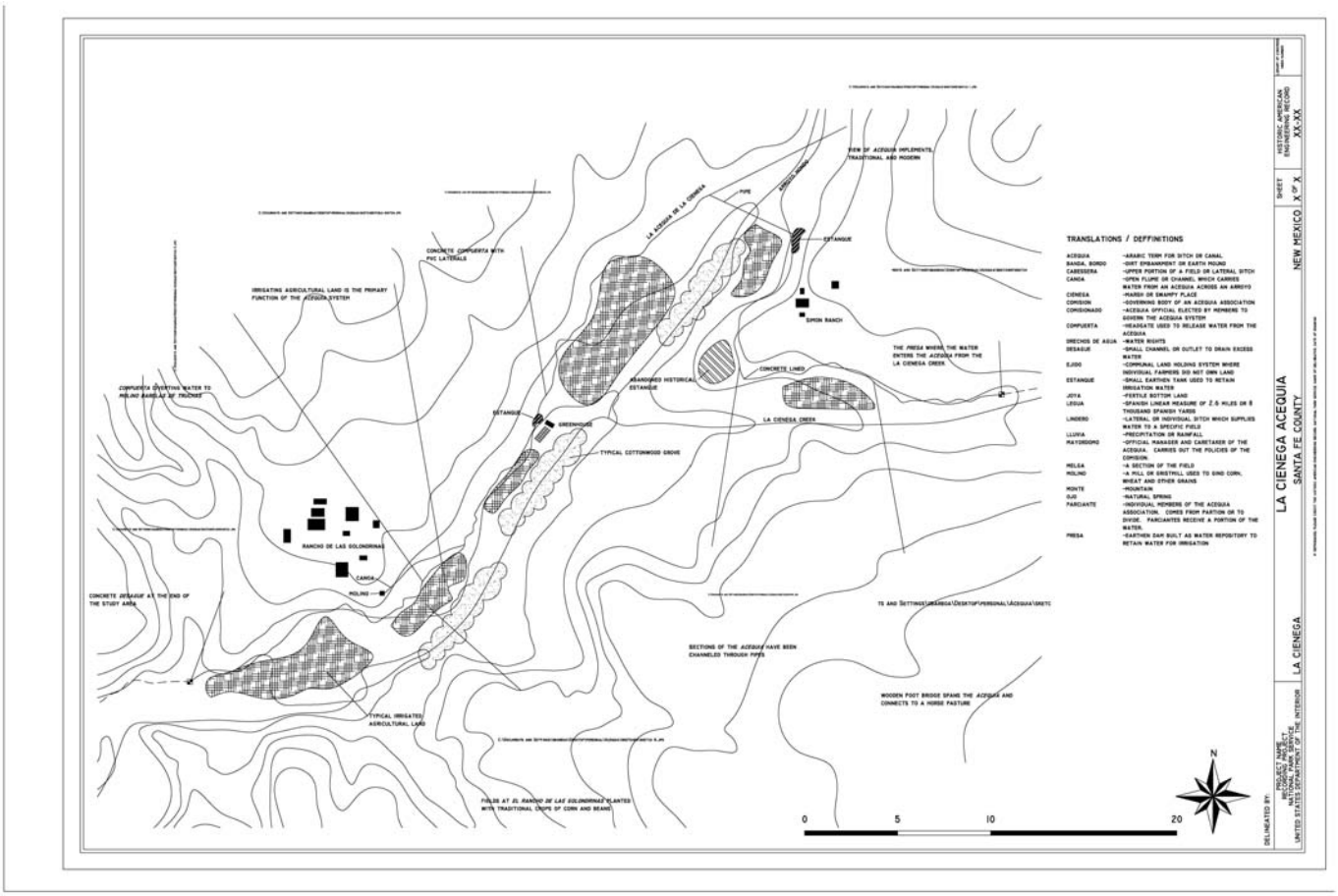

Figure 19. Site Plan of La Cienega Acequia

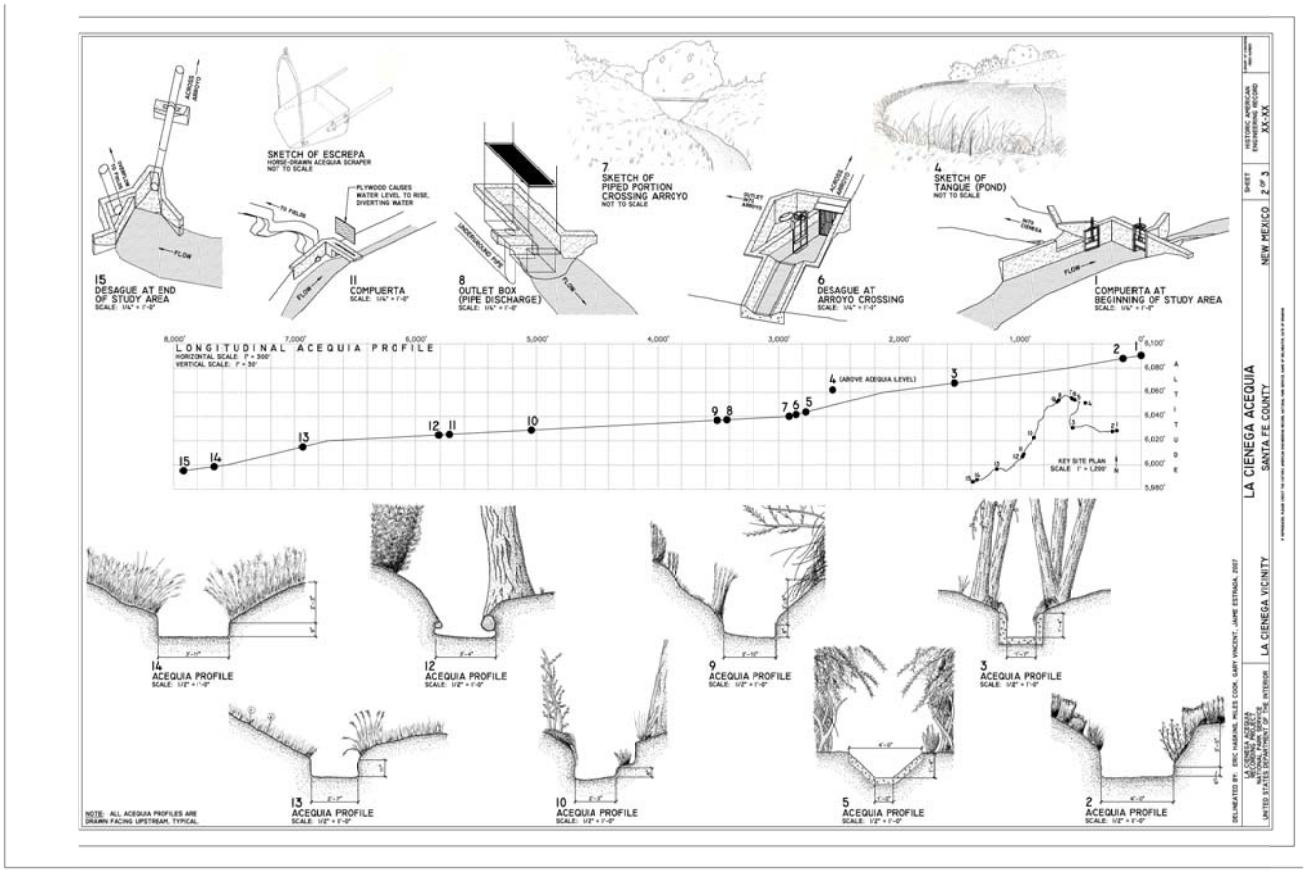

Figure 20 . Crossestions and Details of La Cienega Acequia

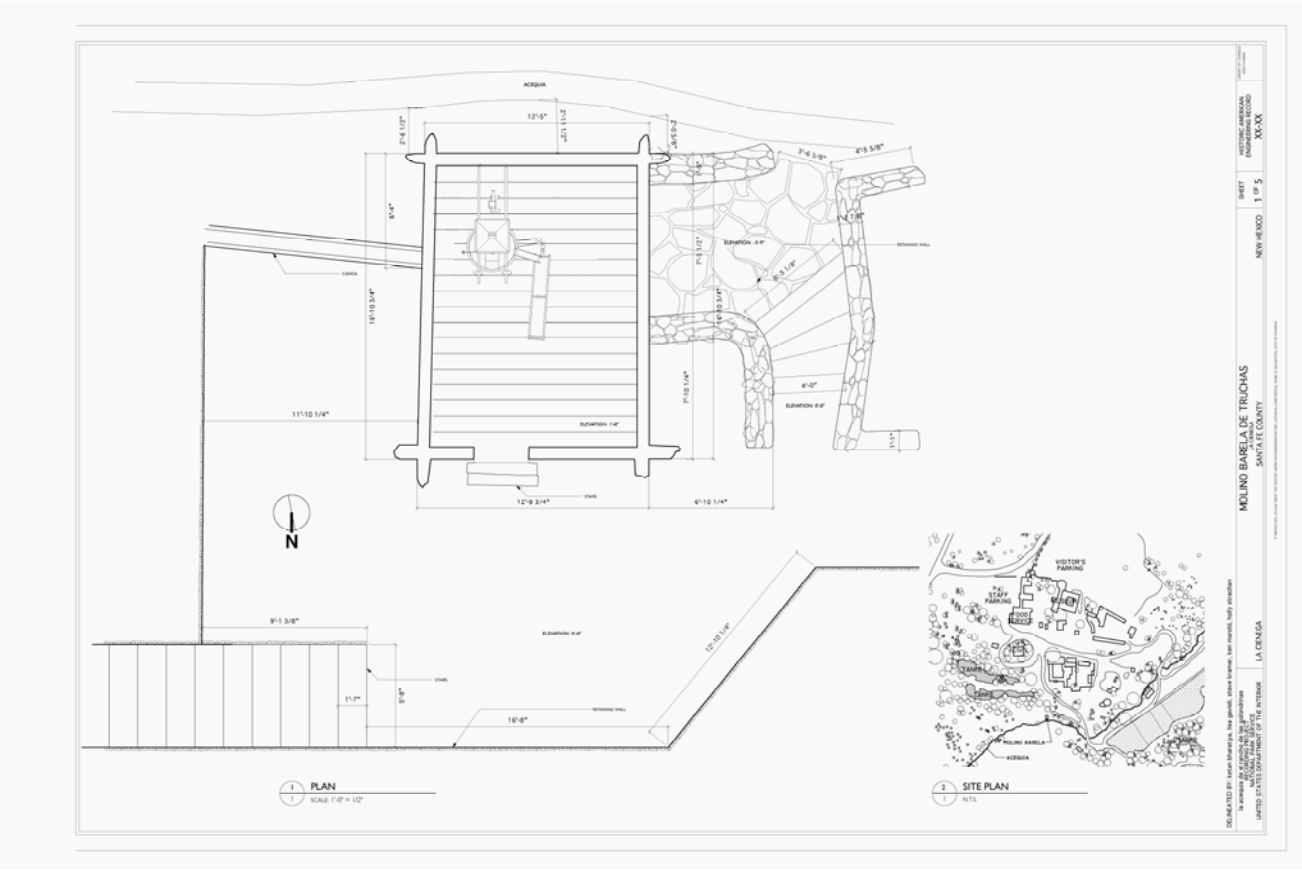

Figure 21. Site Plan and Floor Plan of Truchas Molino


Kodak 400TMY


Kodak 400TMY


Kodak 400TMY


Kodak 400TMY


Kodak 400TMY

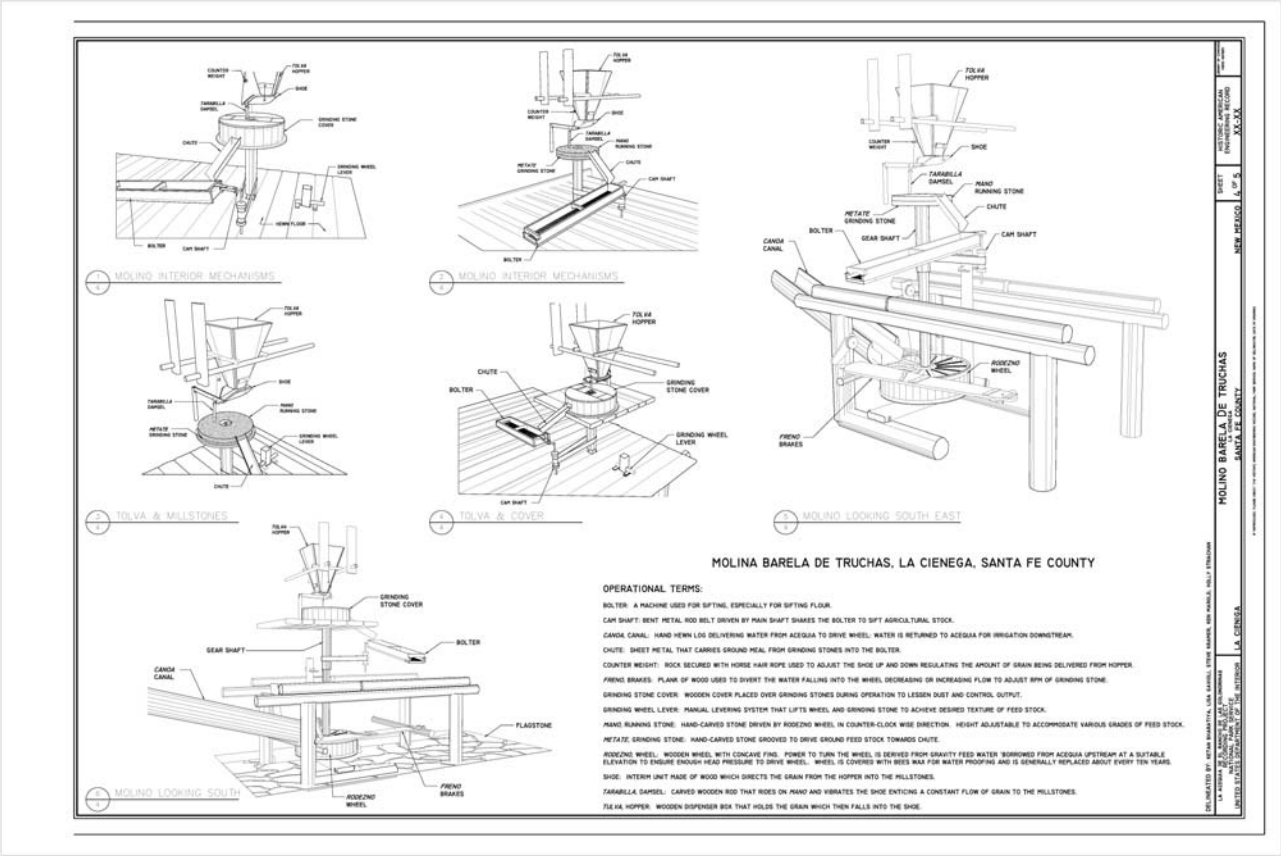

Figure 22. Interior of Truchas Molino

Course Summary for Acequias: Their Culture and Future

The week long intensive course on Acequias was a rewarding and productive venue for all of the participants. The students were offered a combination of academic and field studies, the instructors were able to assemble an impressive list of presenters. Santa Fe County was key in helping sponsor the seminar, offering technical resources via GIS data, field technicians, maps and planning staff. Overall the seminar was a success. The drawings will be submitted to the Library of Congress for archiving into the HABS/HAER Collection. Accompanying the drawings will be a series of HABS/HAER large format photographs to of the acequia and associated features taken by Martin Stupich, Professional Photographer.
A presentation of the final class products will be forthcoming in the Spring of 2008 to the La Cienega Valley Community Association and Rancho de las Golondrinas. Also, several of the students and instructors will be attending the Spring 2008 New Mexico Heritage Preservation Association Conference in Taos to present papers and drawings of the acequia course.

The information gained and methodologies for documentation of acequias will be invaluable for future acequia and cultural landscape documentation. The findings will contribute to the body of knowledge on aceqiuas at the national level allowing New Mexico to further celebrate its rich cultural and technical landscape heritage.